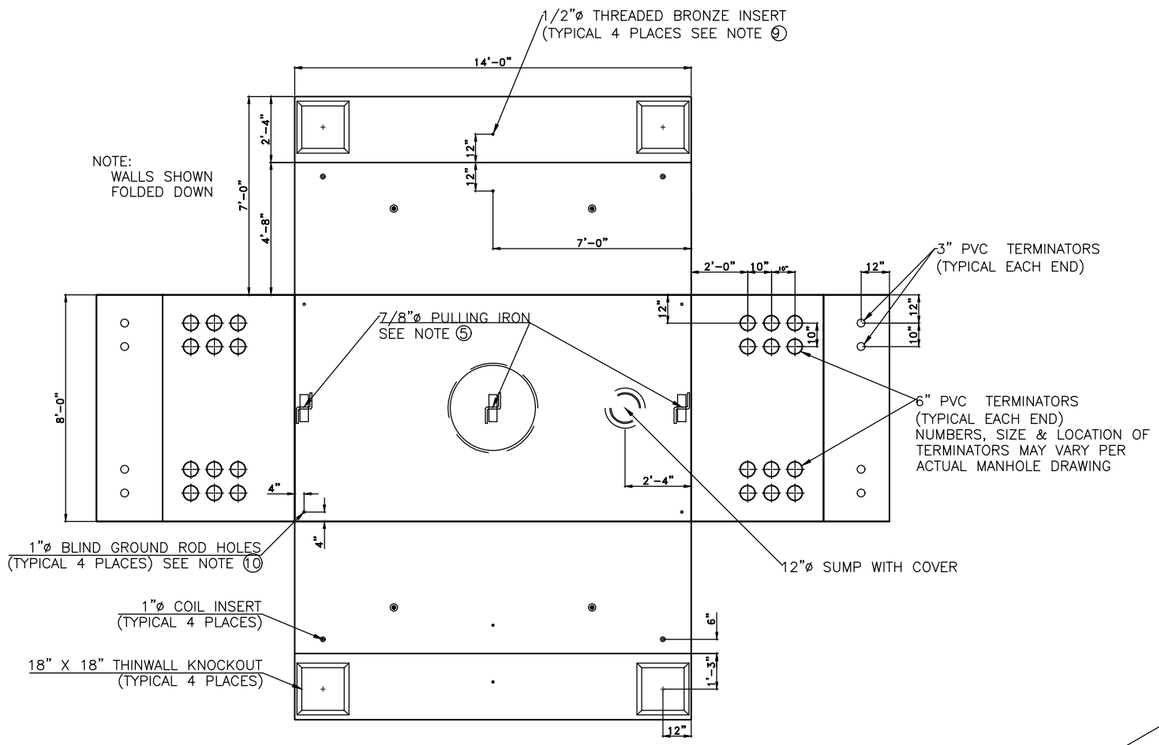

PLAN VIEW (INSIDE SURFACES)

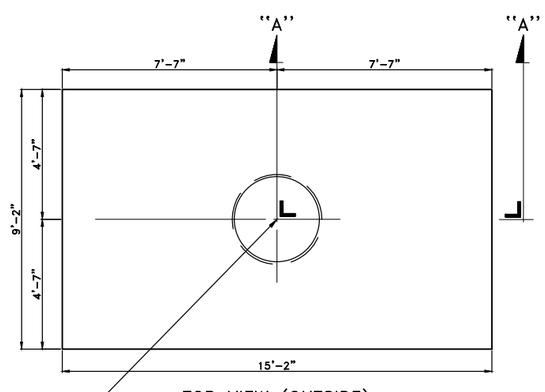

TOP VIEW (OUTSIDE)

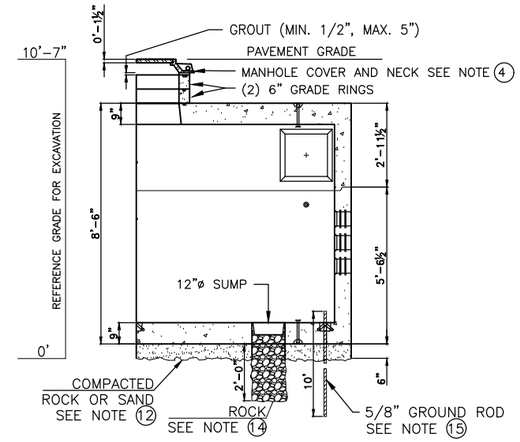

SECTION "A-A"

N.T.S.

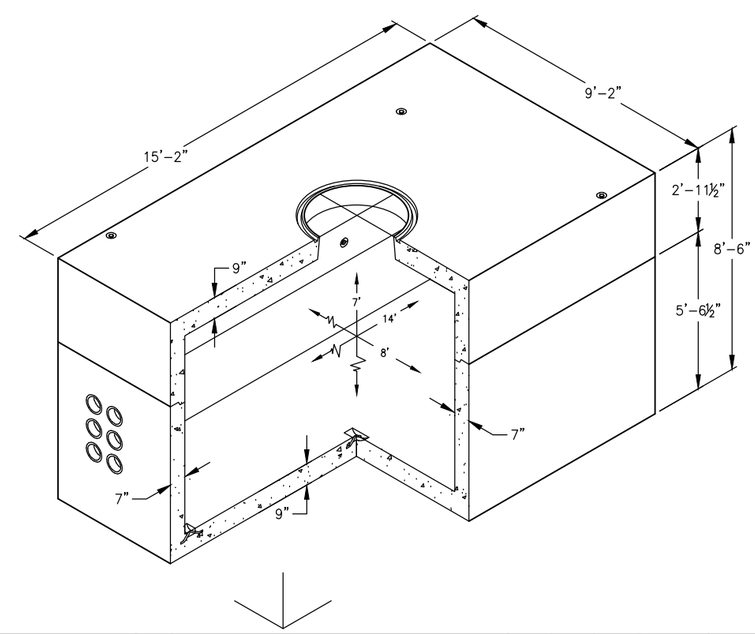

NOTES

TO SUPPLIERS:

1. ENTIRE ASSEMBLY TO BE DESIGNED PER AASHTO H-20-44 BRIDGE LOADING.
2. SETTING OF STRUCTURE INTO EXCAVATION TO BE PERFORMED BY SUPPLIER EQUIPMENT OPERATOR AS PART OF PURCHASE PRICE.
3. CONCRETE MIX SHALL BE DESIGNED TO REACH A MINIMUM STRENGTH OF 5,500 PSI IN 28 DAYS WITH NORMAL WEIGHT AGGREGATES.
4. CAST IRON MANHOLE COVER AND FRAME. EXTRA HEAVY DUTY DIRECT TRAFFIC RATED PER AASHTO M306. COUNTRY OF ORIGIN USA. 30" CLEAR OPENING, 5"-6.5" HEIGHT, MINIMUM 46" OVERALL FLANGE DIAMETER, FRAME NECK TAPER FOR 36" CLEAR OPENING CONCRETE GRADE RING. MACHINED FLANGE SURFACES. PENTA HEAD BOLT DOWN. 2 CLOSED PICK HOLES REQUIRED. THE WORDS "BURBANK" AND "ELECTRIC" SHALL BE CAST INTO THE COVER. THE MANHOLE NUMBER, AS SPECIFIED BY BWP ENGINEERING, SHALL BE WELDED ONTO THE COVER BEFORE INSTALLATION.
5. PULLING IRON AND PULLING INSERT MUST WITHSTAND 10,000 LBS. WORKING TENSION.
6. PROVIDE PREFORMED JOINT SEALING COMPOUND FOR ALL JOINTS.
7. INSIDE SURFACES OF MANHOLE TO BE PAINTED WITH WHITE LATEX PAINT.
8. STEEL REINFORCING BARS TO BE WELDED TOGETHER.
9. 1/2" BRASS INSERT WITH STEEL ROD, BRAZED TO STRUCTURAL STEEL. "GRD" SHALL BE STENCILED IN RED LETTERS ON THE CONCRETE ABOVE THE INSERT. TOP SECTION - (2) CORE MOUNTED / BOTTOM SECTION - (2) CORE MOUNTED
10. PROVIDE (4) 1" DIAMETER BLIND GROUND ROD HOLES IN FLOOR OF MANHOLE AS SHOWN

TO CONTRACTORS:

C 11. MANHOLE SHALL BE JENSEN PRE-CAST PART NO. 200022140 OR BWP ENGINEERING APPROVED EQUIVALENT.
12. MANHOLE TO REST ON COMPACTED ROCK OR SAND BASE, MINIMUM 6" THICK.
13. APPLY JOINT SEALING COMPOUND PER SUPPLIER'S RECOMMENDATION.
14. FILL SUMP CAVITY WITH ROCK TO A DEPTH OF 2 FEET.
15. INSTALL (4) 5/8" X 10' COPPER CLAD GROUND RODS. LEAVE 6" OF THE GROUND ROD PROJECTING ABOVE THE FLOOR.
16. MAXIMUM SOIL COVER OVER THE ROOF OF THE STRUCTURE SHALL NOT BE GREATER THAN 4 FEET WITHOUT THE WRITTEN APPROVAL OF THE ENGINEER.

DWG. NO.	DESCRIPTION	NO.	DESCRIPTION	BY	CHECK	APP'V'D	DATE
		C	UPDATED JENSEN PART NUMBER	MEP	JC	SK	4/22/24
		B	STANDARDIZED FORMATTING	MEP	SK	CJC	5/9/23
		A	ORIGINAL	CC	RS	RS	7/26/16

CROSS REFERENCES — REVISIONS

CITY OF BURBANK
WATER AND POWER

BURBANK WATER AND POWER

ELECTRIC UNDERGROUND SYSTEM
DETAIL SPEC FOR PRECAST MANHOLE
INSIDE DIMENSIONS: 8'-0" x 14'-0" x 7'-0" HIGH

DRAWN Calvin Clark	DATE 2/3/16	O.K.
CHECKED Riad Sleiman	SCALE NONE	O.K.
APPROVED Riad Sleiman, PRINCIPAL ELECTRICAL ENGINEER		S-804C